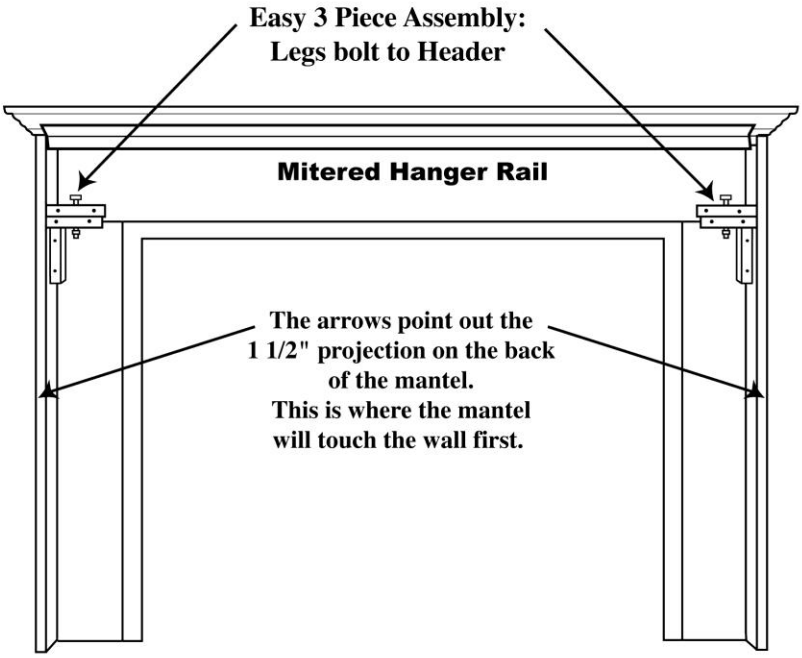
Easy 3 Piece Assembly:
Legs bolt to Header
Mitered Hanger Rail
The arrows point out the
1 1/2" projection on the back
of the mantel.
This is where the mantel
will touch the wall first.

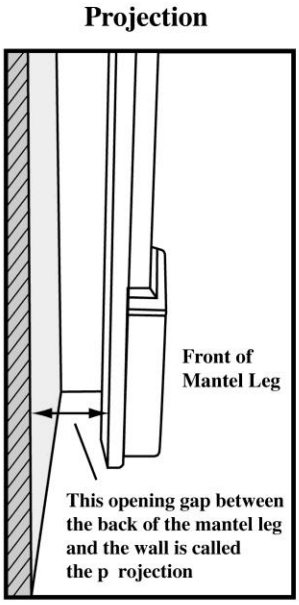
Projection
Front of
Mantel Leg
This opening gap between
the back of the mantel leg
and the wall is called
the p rojection

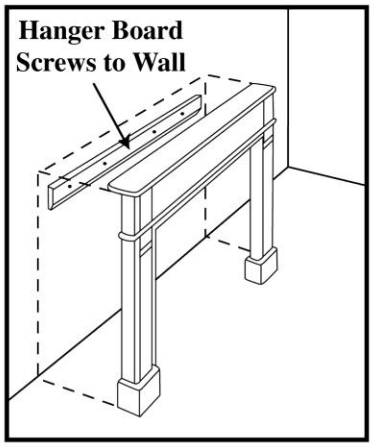
Hanger Board
Screws to Wall

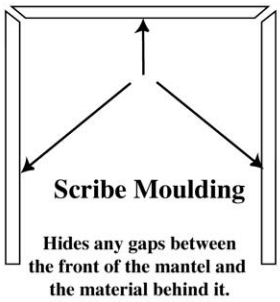
Scribe Moulding
Hides any gaps between
the front of the mantel and
the material behind it.

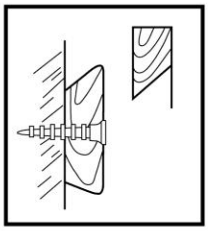

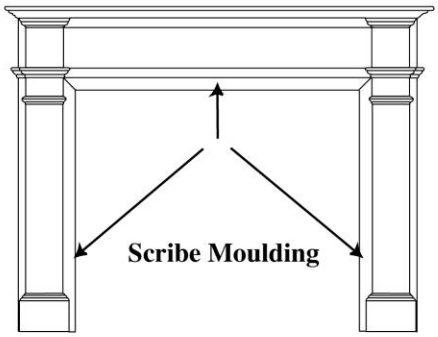
Scribe Moulding